MD 90 L 4

1-Phase 230 V 50 Hz

Duty Type	: S1
Degree of protection	: IP 55 (TEFC)
Insulation class	: F (155 °C)
Temp rise	: Class B (80K)
Mounting Design	: B3

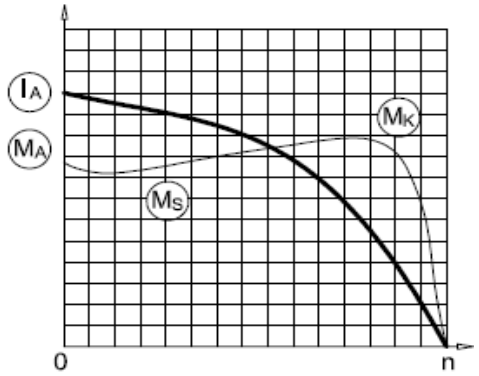

ELECTRICAL DESIGN

Rated output (kW)	: 1.5
Speed (rpm)	: 1410
Rated current (A)	: 9.3
Torque – Mn (Nm)	: 10.16
Permanent Capacitor 400V (μF)	: 50
Cos φ	: 0.96
Efficiency %	: 72.0
Moment of inertia J (kgm)^2	: 0.00265

Locked rotor Current – Ia (A)	: 30.69
Ia / In	: 3.3
Locked rotor Torque – Ma (Nm)	: 5.79
Ma / Mn	: 0.57
Breakdown Torque – Mk (Nm)	: 18.3
Mk / Mn	: 1.8

MECHANICAL DESIGN

Frame	: Aluminium
End shields	: Aluminium
Cooling fan	: Plastic
Terminal box	: Plastic
Cable gland	: Pg 16
No of cable glands	: 1

Bearing Arrangement

	Drive End	Non Drive End
Standard design	6205 ZZ	6205 ZZ

Paint : RAL 7031- Grey

Approximate weight (kg) : 15.8

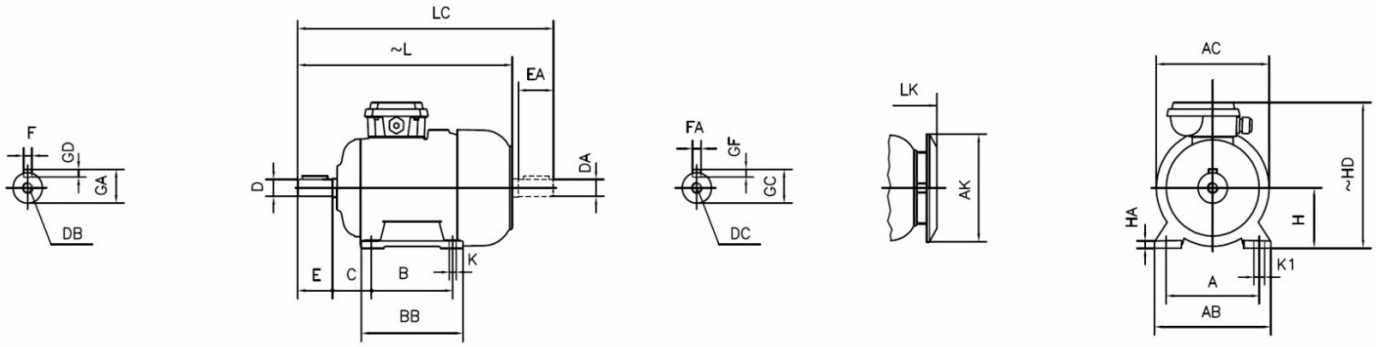

DIMENSIONS

FOOT MOUNTED MOTORS - B3, B6, B7, B8 B15, V5, V6																			
H	HD ~	HA	A	AB	AC Ø	AK Ø	K	K1	B	BB	L ~	LC	LK ~	C	E EA	DB DC	DØ DAØ	GA GC	FXGD FAXGF
90	23	12	140	180	176	150	10	15	125	155	333	388	363	56	50	M8	24	27	8X7